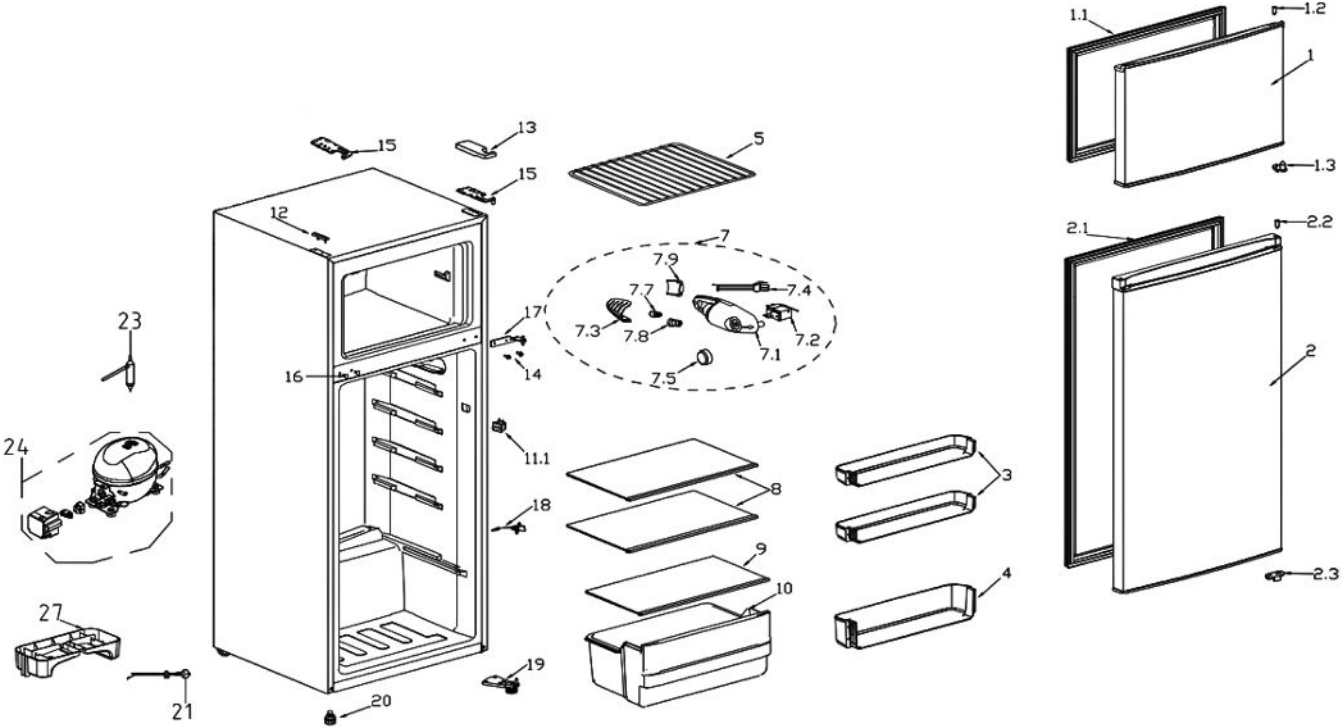
1.1
1.2
1
1.3
2.1
2.2
2
2.3
15
13
15
5
12
7
7.9
7.7
7.4
17
7.3
7.8
7.2
7.1
14
7.5
23
16
24
11.1
8
3
18
9
10
4
27
19
21
20